The Pi2Grover board provides Grove Digital, Grover Serial and Grove I2C ports for your IOT prototyping needs. No software required. It just works.

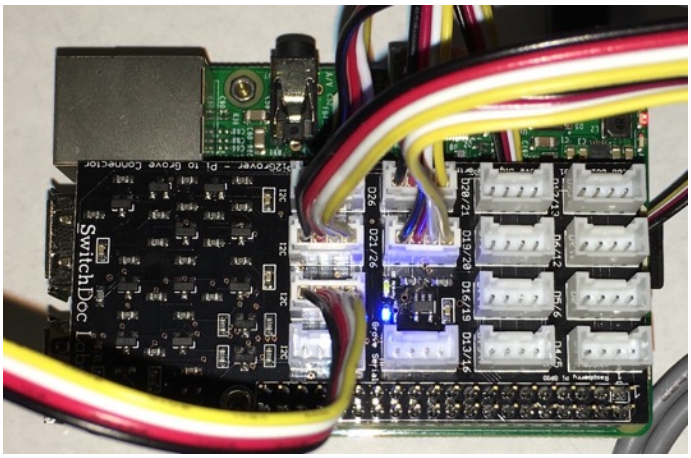

Features and Benefits:

- Great for Prototyping
- 15 Grove Connectors
- Designed for the new Raspberry Pi boards (+, Zero, 2 and 3)
- Transparent to Software - No Drivers required
- Works with existing Drivers out of the box
- Pass Through Raspberry Pi GPIO Connector
- All Grove Connectors support 5V
- On Board 3.3V to 5V Bi-directional translators
- 4 Grove I2C Connectors (5V)
- 1 Grove UART Connector (5V)
- 10 Grove Digital Connectors (5V)
- Quantity Discounts Available
- Immediate Availability

Introduction

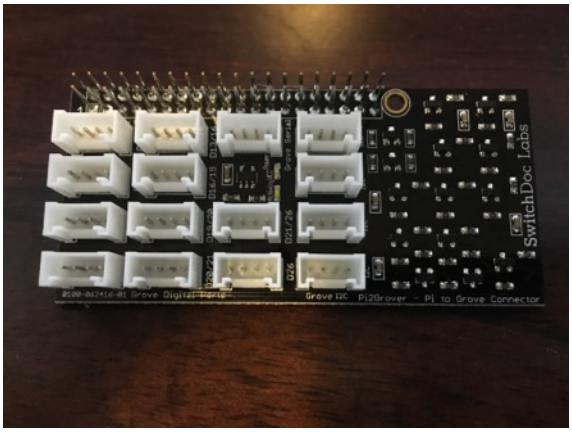

The Pi2Grover board provides 15 Grove connectors for your prototyping needs. 10 Grove Digital, 4 Grove I2C, and one Grove UART. Fast prototyping with many, many different Grove devices available. No software drivers required. You are right next to the hardware.

It plugs right into your Raspberry Pi with a special connector that allows you to plug boards or hats on top of the Grove board. And you know, we like hats at SwitchDoc Labs. Especially Fedora hats!.

Theory of Operation

Pi2Grover Board

The Pi2Grover board provides buffered connections and voltage translation between the Raspberry Pi pins and external Grove modules. Pi2Grover provides bi-directional voltage translation from the Raspberry Pi (3.3V) to 5V. The board is “transparent” to any software, so existing drivers for modules will work with no translation required. Voltage translation for I2C Bus is also supported by the Pi2Grover board.

What are Grove Connectors?

A Grove connector is a four pin standardized size connector used to plug into the Pi2Grover base unit and Grove devices and modules. These standardized connectors (common to all types of Grove Connectors) are the key to making this system work. They are keyed to prevent plugging them in backwards, and the four types of connectors (see below) are all designed so that if you plug the wrong type of device into the wrong type of base unit, there is no problem. They just won’t work. This is a good thing. Less smoke, more prototyping!

The Four Types of Grove Connectors

Below are some of the specifics of each of the four types of connectors. First of all, physically all of them are the same. Exactly. The differences are in the signal types that are provided. Now, note. You will never short out power and ground by mis-plugging one type of Grove connector in the other. **However, it is possible to plug a 3.3V Grove Module into a 5.0V Grove connector and damage the device**. The same could happen with an output coming back from a Grove button or switch for example into another output. While you do need to be careful and think about what you are doing, it is a lot less risky than soldering or using just jumpers to wire up devices to your Pi or Arduino.

Generically, all of the Grove connectors are wired the same: Signal 1, Signal 2, Power, Ground.

Grove Digital (5V on Pi2Grover)

A digital Grove connector consists of the standard four lines coming into the Grove plug. The two signal lines are generically called D0 and D1. Most modules only use D0, but some do (like the LED Bar Grove display) use both. Often base units will have the first connector called D0 and the second called D1 and they will be wired D0/D1 and then D1/D2, etc.

Grove Digital		
Pin 1	D0	Primary Digital Input/Output
Pin 2	D1	Secondary Digital Input/Output
Pin 3	VCC	Power for Grove Module (5V or 3.3V)
Pin 4	GND	Ground

Examples of Grove Digital modules are: Switch Modules, the Fan Module, and the LED Module.

Grove Analog (Note: Pi2Grover has no Analog Connectors. Grove Analog is supplied by the Grove 4Channel 16 bit ADC Module)

An Grove Analog connector consists of the standard four lines coming into the Grove plug. The two signal lines are generically called A0 and D0. Most modules only use A0. Often base units will have the first connector called A0 and the second called A1 and they will be wired A0/A1 and then A1/A2, etc.

Grove Analog		
Pin 1	A0	Primary Analog Input
Pin 2	A1	Secondary Analog Input
Pin 3	VCC	Power for Grove Module (5V or 3.3V)
Pin 4	GND	Ground

Examples of Grove Analog modules are: Potentiometer, Voltage Divider and the Grove Air Quality Sensor.

Grove UART (5V on Pi2Grover)

The Grove UART module is a specialized version of a Grove Digital Module. It uses both Pin 1 and Pin 2 for the serial input and transmit. The Grove UART plug is labeled from the base unit point of view. In other words, Pin 1 is the RX line (which the base unit uses to receive data, so it is an input) where Pin 2 is the TX line (which the base unit uses to transmit data to the Grove module).

Grove UART		
Pin 1	RX	Serial Receive (from base point of view)
Pin 2	TX	Serial Transmit (from base point of view)
Pin 3	VCC	Power for Grove Module (5V or 3.3V)
Pin 4	GND	Ground

Examples of Grove UART modules are: XBee Wireless Sockets, 125KHz RFID Reader

Grove I2C (5V on Pi2Grover)

Those long term readers of this column know that the my favorite devices are I2C sensors. There are many types of I2C Grove sensors available. Most are 5V/3.3V devices, but there are a few that are only 3.3V or 5.0V. You need to check the specifications.

The Grove I2C connector has the standard layout. Pin 1 is the SCL signal and Pin 2 is the SDA signal. Power and Ground are the same as the other connectors. This is another special version of the Grove Digital Connector. In fact, often the I2C bus on a controller (like the ESP8266, Raspberry Pi and the Arduino) just uses Digital I/O pins to implement the I2C bus. The pins on the Raspberry Pi and Arduino are special with hardware support for the I2C bus. The ESP8266 is purely software.

Grove I2C		
Pin 1	SCL	I2C Clock
Pin 2	SDA	I2C Data
Pin 3	VCC	Power for Grove Module (5V or 3.3V)
Pin 4	GND	Ground

Pi2Grover Grove/Pi Interface Pinout

Physical dimensions of board: 79mm x 37 mm x 10mm(max). One mounting hole, compatible with Raspberry Pi Mounting holes.

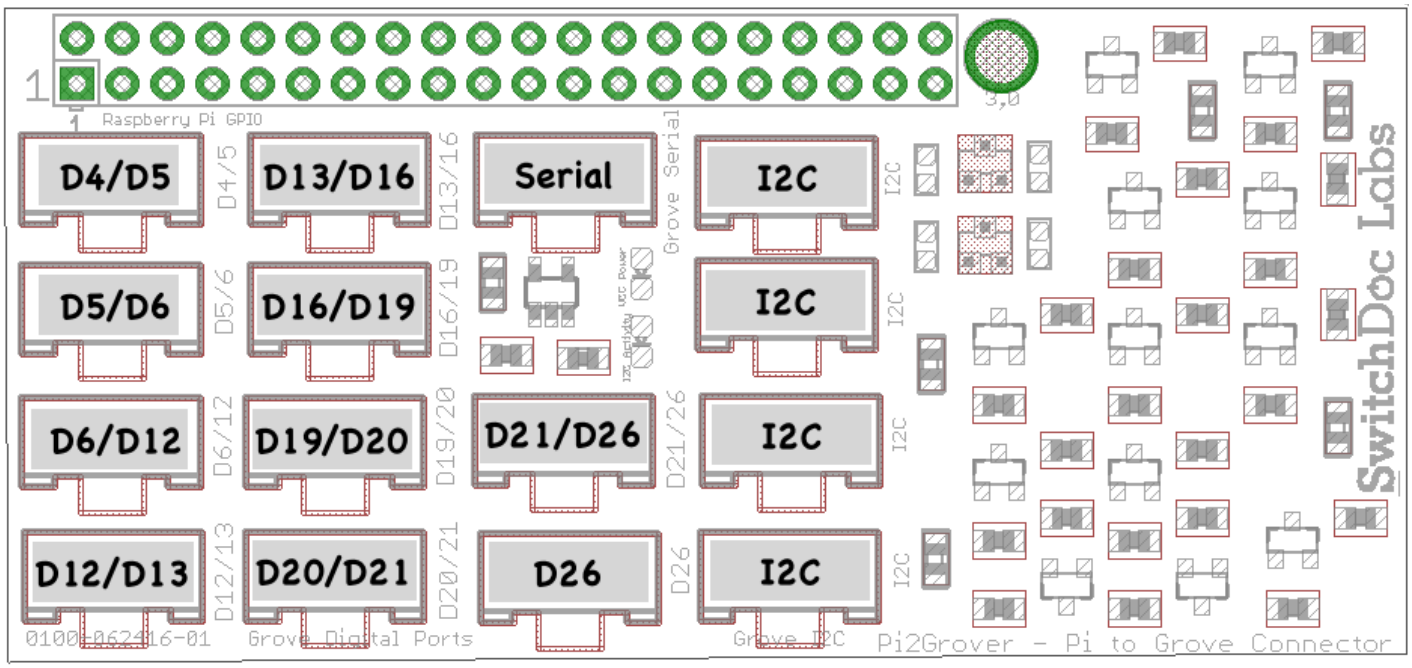

How To Use the Board

Warning: Always turn off the power before you remove or replace any Grove devices on your Raspberry Pi. You may damage your devices or your Raspberry Pi!

Grove I2C

All of the Pi2Grover I2C connectors are identical and run at 5V. You may use any of the Grove I2C ports interchangably.

Grove Digital

When using the digital I/O, note the staggered alignment of the pins – that is, one socket handles D4 and D5, the next D5 and D6, and so on. If you are going to use an input for a unit and an output unit which have two signal pins simultaneously, separate your wires so that an empty socket is between them.

This allows you to use Grove devices that require two I/O pins. However, that means you need to separate Grove devices that use two I/O pins.

The Grove Digital numbers (D5., D6 etc.) refer to Raspberry Pi GPIO numbers using the GPIO.BCM number scheme (GPIO5, GPIO6, etc.)

Grove UART

The Grove UART is connected to the Raspberry Pi Serial lines (TXD and RXD) directly through a 3.3V to 5V converter. All your Raspberry Pi Serial code will work correctly through this port.

What if you need more serial ports? Use a Grove Digital port and a Software Serial package. However, since the Raspberry Pi is a multi-tasking operating system, fast baud rates will yield timing errors.

Operating Values

			Min	Normal	Max	Unit
VDDM	Supply Voltage			5.0V		V
VCC1/VCC2	IO Supply Voltage			5.0V		V
IOH	GPIO Output High Source Current				50mA max for all outputs combined	mA
IOL	GPIO Output High Source Current				50mA max for all outputs combined	mA

LEDs on Pi2Grover

There are two LEDs on Pi2Grover.

LED1 (Power) - On if Raspberry Pi is supplying 5V to the Pi2Grover Board

LED2 (I2C Activity) - Flashes when there is activity on the Raspberry Pi I2C bus. If you aren't using the Raspberry Pi I2C bus, you can flash this LED by setting GPIO1 (BCM numbering) to 0 for On and 1 for Off.

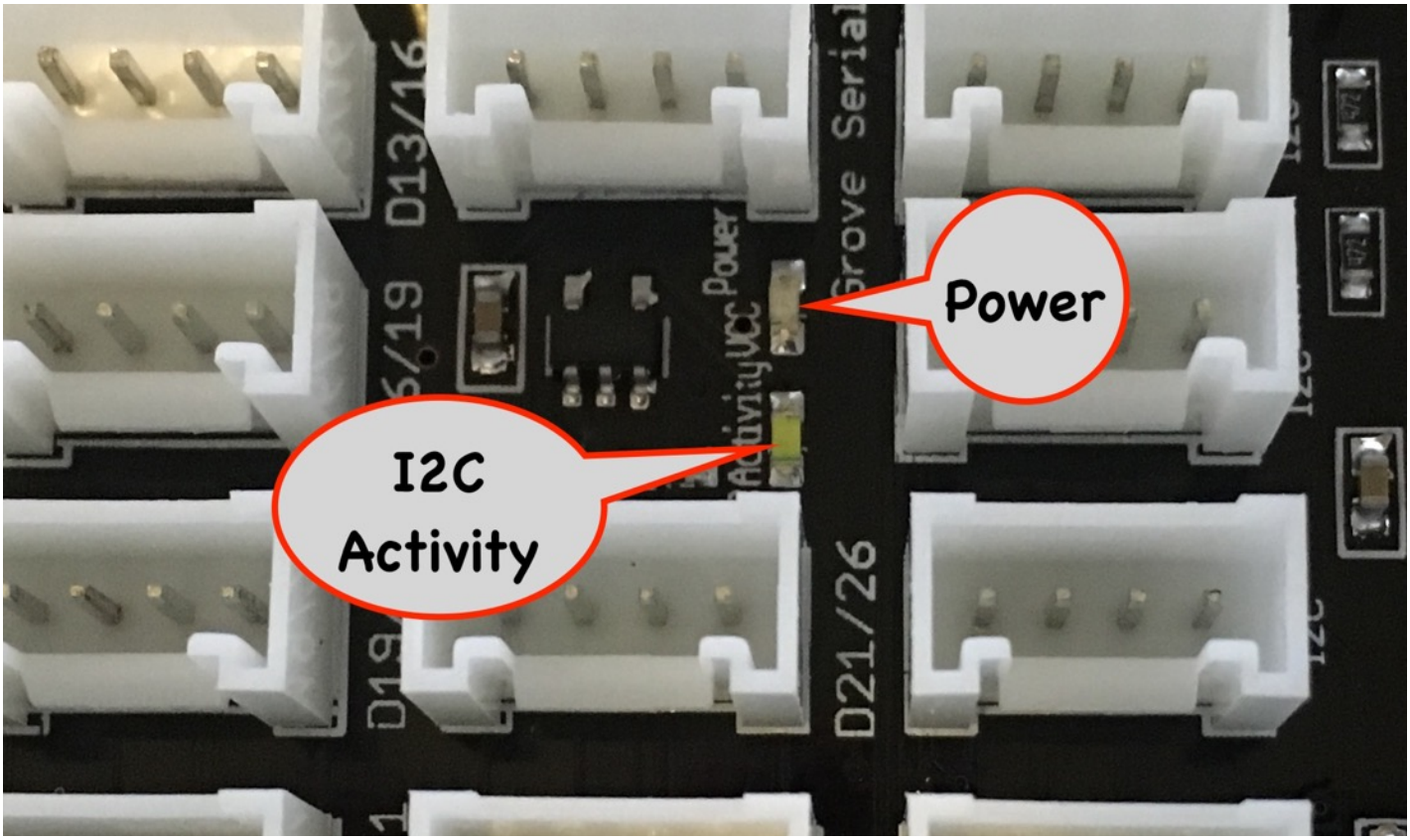

Example Project

Here is a simple IOT project on the Raspberry Pi using the Pi2Grover (Using the Version 1 Pi2Grover Board) board, Grove Analog to Digital board and an Grove Analog Air Quality Sensor.

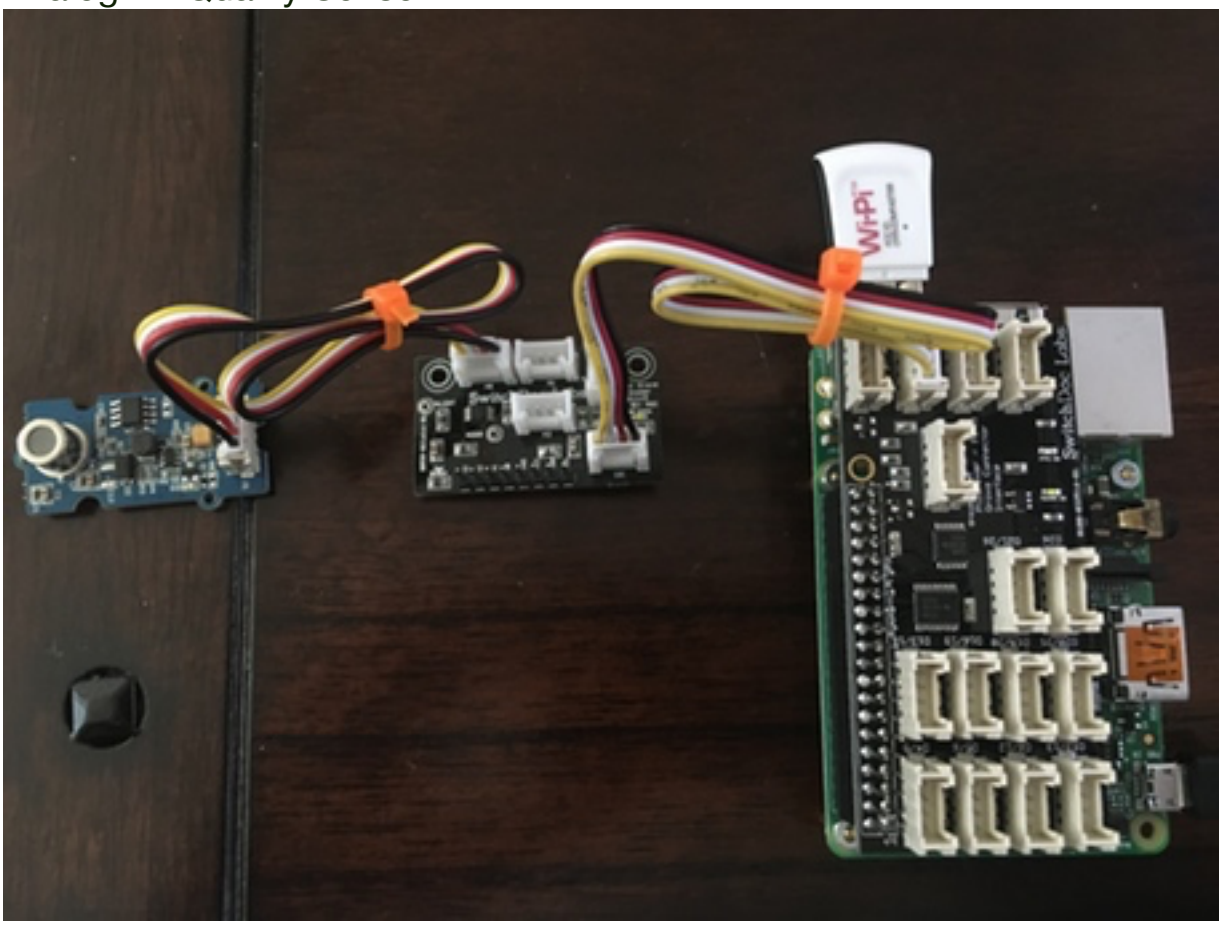

Air Quality Sensor Project

We built this in a matter of minutes. Plugged the Pi2Grover into the Raspberry Pi, the Grove Analog to Digital to a Grove I2C connector and the Grove Air Quality Sensor into the Grove Analog A0 input on the Grove Analog to Digital board. Done. We installed the software and here are the results. For your information, we caused the air pollution alert with a can of hairspray.

```
------------------------------
------------------------------
OurWeather - Air Quality Sensor Test
------------------------------
------------------------------
Completed Setup
Sensor_Value=78--->Fresh Air
Sensor_Value=78--->Fresh Air
Sensor_Value=79--->Fresh Air
Sensor_Value=81--->Fresh Air
Sensor_Value=832--->Very High Pollution Detected
Sensor_Value=847--->Very High Pollution Detected
Sensor_Value=821--->Very High Pollution Detected
Sensor_Value=826--->Very High Pollution Detected
Sensor_Value=839--->Very High Pollution Detected
Sensor_Value=834--->Very High Pollution Detected
Sensor_Value=811--->Very High Pollution Detected
Sensor_Value=788--->Very High Pollution Detected
Sensor_Value=779--->Very High Pollution Detected
Sensor_Value=768--->Very High Pollution Detected
Sensor_Value=758--->Very High Pollution Detected
Sensor_Value=717--->Very High Pollution Detected
Sensor_Value=638--->High Pollution
Sensor_Value=544--->High Pollution
Sensor_Value=457--->High Pollution
Sensor_Value=399--->Low Pollution
Sensor_Value=352--->Low Pollution
Sensor_Value=309--->Low Pollution
Sensor_Value=281--->Low Pollution
Sensor_Value=260--->Low Pollution
Sensor_Value=238--->Low Pollution
Sensor_Value=221--->Low Pollution
Sensor_Value=210--->Low Pollution
Sensor_Value=205--->Low Pollution
Sensor_Value=189--->Fresh Air
Sensor_Value=174--->Fresh Air
```

Hairspray Air Pollution Detected!

Software for Arduino and Raspberry Pi

No software required to use the Pi2Grover board