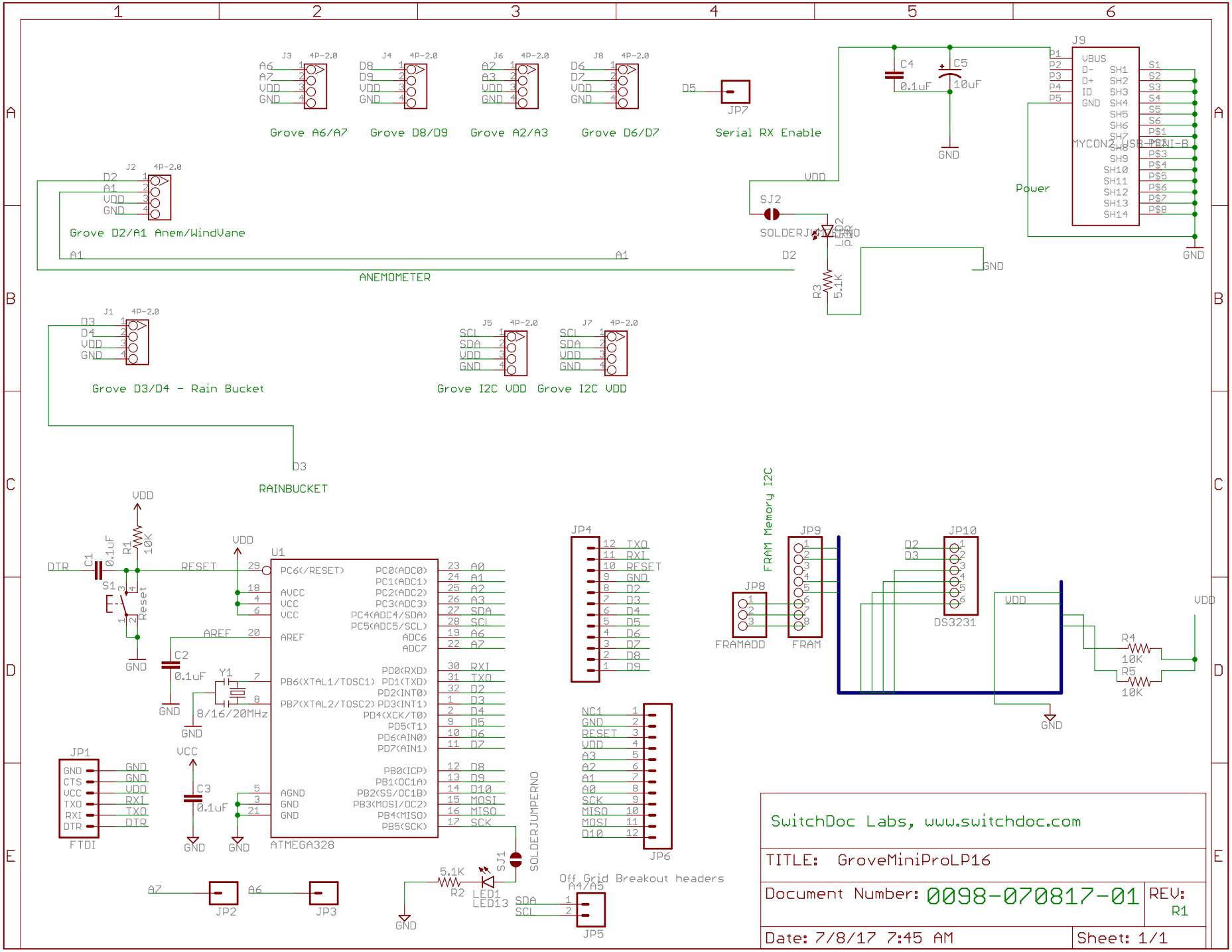
Grove A6/A7
Grove D8/D9
Grove A2/A3
Grove D6/D7
Serial RX Enable
Grove D2/A1 Anem/WindVane
ANEMOMETER
Power
Grove D3/D4 - Rain Bucket
Grove I2C VDD
Grove I2C VDD
RAINBUCKET
FRAM Memory I2C
ATMEGA328
FTDI
SOLDERJUMPERNO
Off Grid Breakout headers
DS3231
FRAM
FRAMADD
MYCON2_USB-MINI-B
SwitchDoc Labs, www.switchdoc.com
TITLE: GroveMiniProLP16
Document Number: 0098-070817-01
REV: R1
Date: 7/8/17 7:45 AM
Sheet: 1/1